TELTONIKA | Networks

TRB140

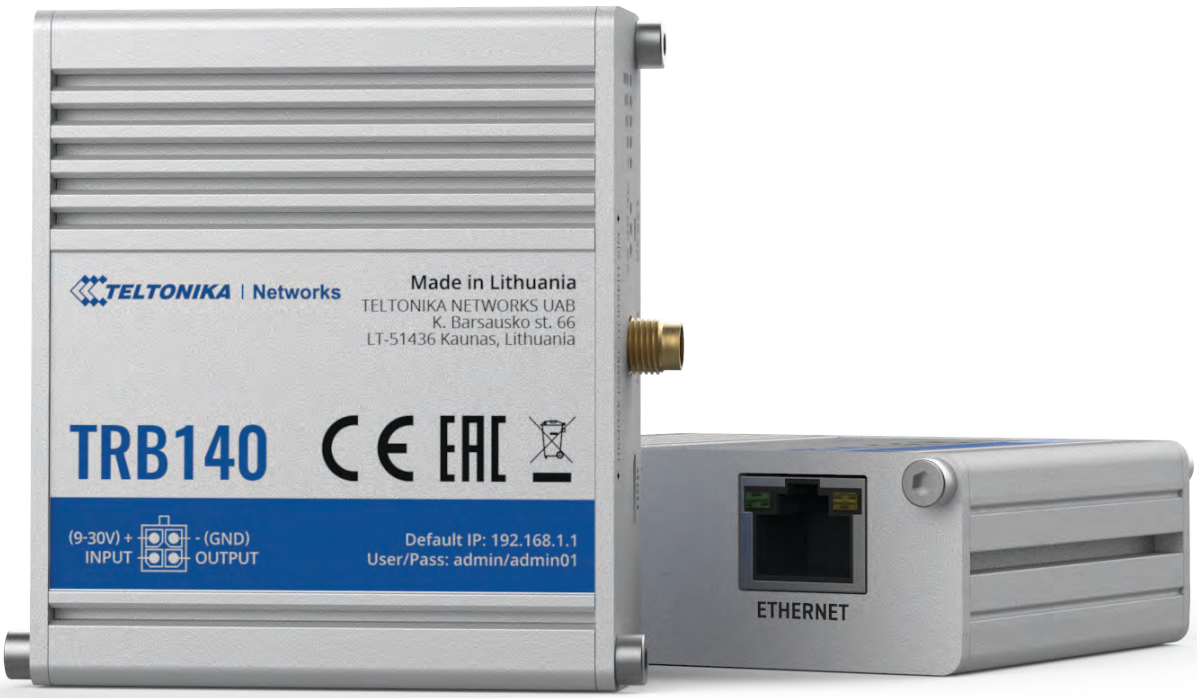

Copyright © 2020, Teltonika Networks. Specifications and information given in this document are subject to change by Teltonika Networks without prior notice.

HARDWARE

FRONT VIEW

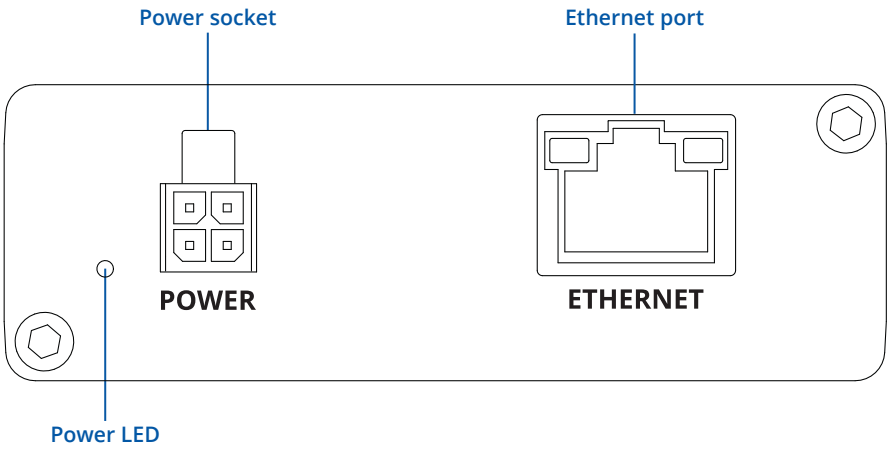

BACK VIEW

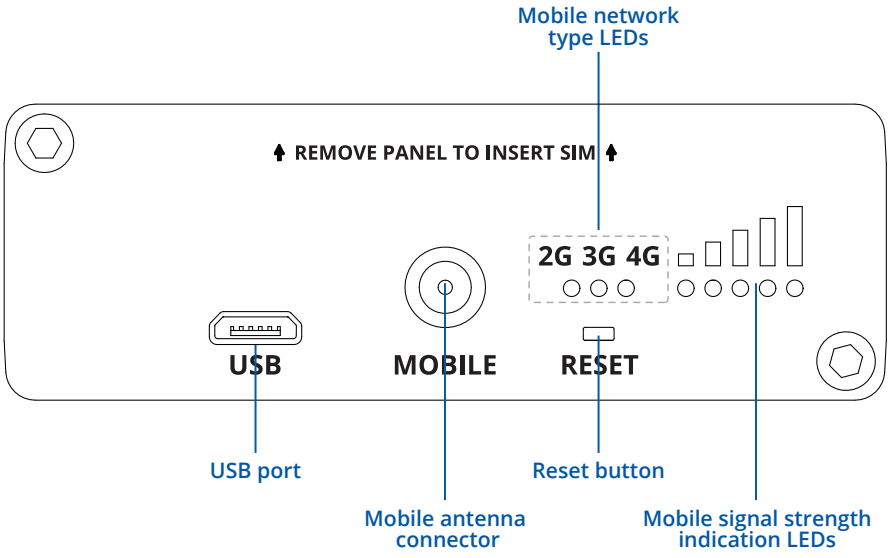

POWER SOCKET PINOUT

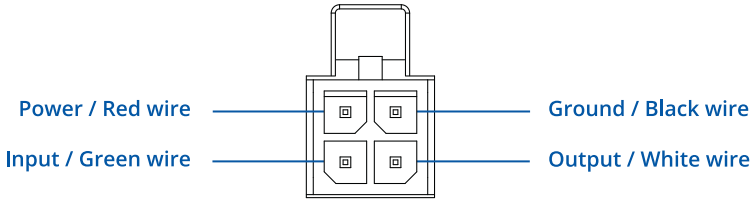

Copyright © 2020, Teltonika Networks. Specifications and information given in this document are subject to change by Teltonika Networks without prior notice.

FEATURES

MOBILE

Mobile module	4G (LTE) – Cat 4 up to 150 Mbps, 3G – Up to 42 Mbps, 2G – Up to 236.8 kbps
Bridge	Direct connection (bridge) between mobile ISP and device on LAN
Status	Signal strength (RSSI), SINR, RSRP, RSRQ, EC/IO, RSCP Bytes sent/received
SMS/Call	SMS status, SMS configuration, Call utilities

ETHERNET

LAN	1 x RJ45 port, 10/100/1000 Mbps, supports auto MDI/MDIX

NETWORK

Network protocols	TCP, UDP, IPv4, IPv6, ICMP, NTP, DNS, HTTP, HTTPS, SSL v3, TLS, SSH, DHCP, MQTT, Wake on LAN (WOL)
Routing	Static routing
Connection monitoring	Ping Reboot, Periodic Reboot, LCP and ICMP for link inspection, Wget
Firewall	Port forwards, traffic rules, custom rules
DHCP	Static and dynamic IP allocation
QoS / Smart Queue Management (SQM) (planned)	Traffic priority queuing by source/destination, service, protocol or port
DHCP	Supported >25 service providers, others can be configured manually

SECURITY

Authentication	Pre-shared key, digital certificates, X.509 certificates
Firewall	Pre-configured firewall rules can be enabled via the WebUI, unlimited firewall configuration via CLI; NAT; NAT-T
Access control	Flexible access control of TCP, UDP, ICMP packets, MAC address filter

VPN

OpenVPN	Multiple clients and a server can run simultaneously, 12 encryption methods
OpenVPN Encryption	DES-CBC, RC2-CBC, DES-EDE-CBC, DES-EDE3-CBC, DESX-CBC, BF-CBC, RC2-40-CBC, CAST5-CBC, RC2-64-CBC, AES-128-CBC, AES-192-CBC, AES-256-CBC
IPsec	IKEv1, IKEv2, supports up to 5 x VPN IPsec tunnels (instances), with 5 encryption methods (DES, 3DES, AES128, AES192, AES256)
GRE	GRE tunnel
PPTP, L2TP	Client/Server services can run simultaneously

MONITORING & MANAGEMENT

WEB UI	HTTP/HTTPS, status, configuration, FW update, CLI, troubleshoot, system log, kernel log
FOTA	Firmware update from sever, automatic notification
SSH	SSH (v1, v2)
SMS	SMS status, SMS configuration
MQTT	MQTT Broker, MQTT publisher
JSON-RPC	Management API over HTTP/HTTPS
Modbus	Modbus TCP status/control
RMS	Teltonika Remote Management System (RMS)

SYSTEM CHARACTERISTICS

CPU	ARM Cortex-A7 1.2 GHz CPU
RAM	128 MB (50 MB available for userspace)
FLASH memory	512 MB (200 MB available for userspace)

Copyright © 2020, Teltonika Networks. Specifications and information given in this document are subject to change by Teltonika Networks without prior notice.

FIRMWARE / CONFIGURATION

WEB UI	Update FW from file, check FW on server, configuration profiles, configuration backup
FOTA	Update FW/configuration from server
RMS	Update FW/configuration for multiple devices
Keep settings	Update FW without losing current configuration

FIRMWARE CUSTOMIZATION

Operating system	RutOS (OpenWrt based Linux OS)
Supported languages	Busybox shell, Lua, C, C++
Development tools	SDK package with build environment provided

INPUT/OUTPUT

Configurable I/O	2 x Configurable Digital Inputs/Outputs
Events	SMS status

POWER

Connector	4 pin industrial DC power socket
Input voltage range	9 – 30 VDC (4 pin industrial socket), reverse polarity protection, surge protection >33 VDC 10µ max
PoE (passive)	Passive PoE over spare pairs. Possibility to power up through LAN port, not compatible with IEEE802.3af and 802.3at standards
Power consumption	< 5 W

PHYSICAL INTERFACES (PORTS, LEDS, ANNTENAS, BUTTONS, SIM)

Ethernet	1 x RJ45 port, 10/100/1000 Mbps
I/Os	2 x Configurable Digital Inputs/Outputs on 4 pin power connector
USB	Virtual network interface via USB
Status LEDs	3 x connection type status LEDs, 5 x connection strength LEDs, 2 x LAN status LEDs, 1x Power LED
SIM	1 x SIM slot (Mini SIM – 2FF), 1.8 V/3 V
Power	4 pin DC connector with 2 x configurable Digital Inputs/Outputs
Anntenas	1 x SMA for LTE
Reset	Restore factory settings button

PHYSICAL SPECIFICATION

Casing material	Aluminum housing
Dimensions	64.4 x 74.5 x 25 mm (L x W x H)
Weight	134 g
Mounting options	Bottom and sideways DIN rail, Flat surface and direct PCB on DIN-Rail mounting options

OPERATING ENVIRONMENT

Operating temperature	-40 °C to 75 °C
Operating humidity	10 % to 90 % non-condensing
Ingress Protection Rating	IP30

REGULATORY & TYPE APPROVALS

Regulatory	CE/RED, EAC, RoHS, WEEE

Copyright © 2020, Teltonika Networks. Specifications and information given in this document are subject to change by Teltonika Networks without prior notice.

EMI

Standards	Draft ETSI EN 301 489-1 V2.2.0, Draft ETSI EN 301 489-19 V2.1.0, Draft ETSI EN 301 489-52 V1.1.0
ESD	EN 61000-4-2:2009
RS	EN 61000-4-3:2006 + A1:2008 + A2:2010
EFT	EN 61000-4-4:2012
Surge protection	EN 61000-4-5:2014
CS	EN 61000-4-6:2014
DIP	EN 61000-4-11:2004

RF

Standards	EN 300 511 V12.5.1, ETSI EN 301 908-1 V11.1.1, ETSI EN 301 908-1 V11.1.2, EN 301 908-2 V11.1.2, ETSI EN 301 908-13 V11.1.2

SAFETY

Standards	IEC 62368-1:2014(Second Edition), EN 62368-1:2014+A11:2017 EN 50385:2017 EN 62232:2017

Copyright © 2020, Teltonika Networks. Specifications and information given in this document are subject to change by Teltonika Networks without prior notice.

HARDWARE INSTALLATION

1. Unscrew two back panel hex bolts.
2. Remove the back panel.
3. Insert your SIM card into the SIM socket.
4. Attach the panel and tighten the hex bolts.
5. Attach the mobile antenna (max torque 0.4 N·m / 3.5 lbf·in) and connect the USB cable.

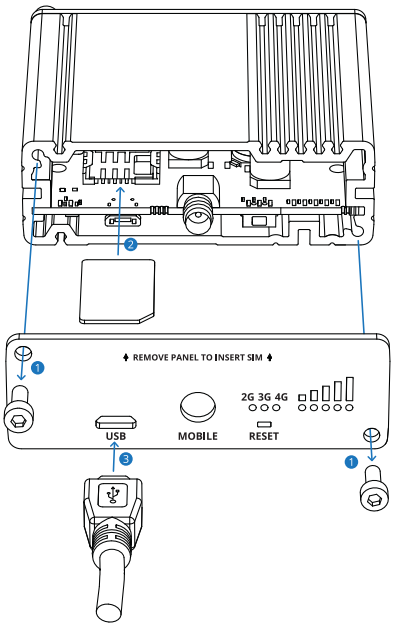

LOGIN TO DEVICE

1. Power on the device and connect the USB cable to your computer.
2. Allow the gateway to boot up. This might take up to 30 seconds.
3. Your computer's OS should detect the USB device and install the driver.
4. To enter the gateway's Web interface (WebUI), type http://192.168.2.1 into the URL field of your Internet browser.
5. Use login information shown in image A when prompted for authentication.
6. After logging in pay attention to the Signal Strength indication displayed in the Mobile widget (image B). To maximize the cellular performance try adjusting the antennas or changing the location of your device to achieve the best signal conditions.

A.

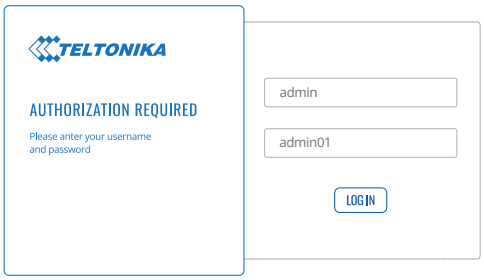

B.

TECHNICAL INFORMATION

Radio specifications	
RF technologies	2G, 3G, 4G
Max RF power	33 dBm@GSM, 24 dBm@WCDMA, 23 dBm@LTE
Bundled accessories specifications*	
Power adapter	Input: 0.4A@100-240VAC, Output: 9VDC, 0.5A, 4-pin plug
Mobile antenna	698~960/1710~2690 MHz, 50 Ω, VSWR<2, gain** 2 dBi, omnidirectional, SMA male connector

*Order code dependent.
**Higher gain antenna can be connected to compensate for cable attenuation when a cable is used. The user is responsible for the compliance with the legal regulations.

Copyright © 2020, Teltonika Networks. Specifications and information given in this document are subject to change by Teltonika Networks without prior notice.

WHAT'S IN THE BOX?

STANDARD PACKAGE CONTAINS

- TRB140 board
- Euro PSU
- 1 x LTE antenna (magnetic mount, SMA male, 3 m cable)
- Micro-USB cable (0.8 m)
- 1 x hex key
- LAN cable
- QSG (Quick Start Guide)
- Packaging box

TRB140	1 X LTE ANTENNA (MAGNETIC MOUNT, SMA MALE, 3 M CABLE)	MICRO-USB CABLE (0.8 M)
EURO PSU	1 X HEX KEY	ETHERNET CABLE (1.5 M)

Copyright © 2020, Teltonika Networks. Specifications and information given in this document are subject to change by Teltonika Networks without prior notice.

STANDARD ORDER CODES

PRODUCT CODE	HS CODE	HTS CODE	PACKAGE CONTAINS
TRB140003000	851762	8517.62.00	Standard Package
TRB140003000	851762	8517.62.00	Standard Package, no housing

For more information on all available packaging options – please contact us directly.

AVAILABLE VERSIONS

PRODUCT CODE	REGION (OPERATOR)	FREQUENCY
TRB140 0*****	Europe, the Middle East, Africa, Korea, Thailand, India, Malaysia	• 4G (LTE-FDD): B1, B3, B7, B8, B20, B28A • 4G (LTE-TDD): B38, B40, B41 • 3G: B1, B8 • 2G: B3, B8
TRB140 1*****	South America, Australia, New Zealand, Taiwan, Malaysia	• 4G (LTE-FDD): B1, B2, B3, B4, B5, B7, B8, B28 • 4G (LTE-TDD): B40 • 3G: B1, B2, B5, B8 • 2G: B2, B3, B5, B8

The price and lead-times for region (operator) specific versions may vary. For more information please contact us.

1 - Versions for other regions are under development.
2 - For more detailed information, visit our Wiki

Copyright © 2020, Teltonika Networks. Specifications and information given in this document are subject to change by Teltonika Networks without prior notice.

MOUNTING OPTIONS

DIN RAIL KIT

Parameter	Value
Mounting standard	35mm DIN Rail
Material	Low carbon steel
Weight	57g
Screws included	Philips Pan Head screw #6-32×3/16, 2pcs
Dimensions	82 mm x 46 mm x 20 mm
RoHS Compliant	V

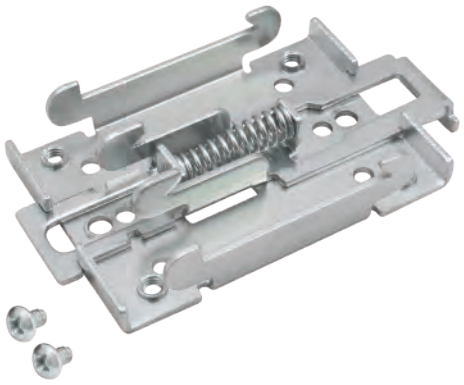

DIN RAIL KIT

- DIN Rail adapter
- Philips Pan Head screw #6-32×3/16, 2pcs for RUT2xx/RUT9xx

ORDER CODE	PRODUCT CODE	HS CODE	HTS CODE
088-00267	PR5MEC00	73269098	7326.90.98

For more information on all available packaging options – please contact us directly.

COMPACT DIN RAIL KIT

Parameter	Value
Mounting standard	35mm DIN Rail
Material	ABS + PC plastic
Weight	6.5 g
Screws included	Philips Pan Head screw #6-32×3/16, 2pcs
Dimensions	70 mm x 25 mm x 14,5 mm
RoHS Compliant	V

DIN RAIL KIT

- Compact plastic DIN Rail adapter (70x25x14,5mm)
- Philips Pan Head screw #6-32×3/16, 2pcs

ORDER CODE	PRODUCT CODE	HS CODE	HTS CODE
088-00270	PR5MEC11	73269098	7326.90.98

For more information on all available packaging options – please contact us directly.

SURFACE MOUNTING KIT

Parameter	Value
Mounting standard	Flat surface mount
Material	ABS + PC plastic
Weight	2x5 g
Screws included	Philips Pan Head screw #6-32×3/16, 2pcs
Dimensions	25 mm x 48 mm x 7.5 mm
RoHS Compliant	V

DIN RAIL KIT

- Surface mounting kit
- Philips Pan Head screw #6-32×3/16, 2pcs

ORDER CODE	PRODUCT CODE	HS CODE	HTS CODE
088-00281	PR5MEC12	73269098	7326.90.98

For more information on all available packaging options – please contact us directly.

Copyright © 2020, Teltonika Networks. Specifications and information given in this document are subject to change by Teltonika Networks without prior notice.

TRB140 SPATIAL MEASUREMENTS & WEIGHT

MAIN MEASUREMENTS

H x W x D dimensions for TRB140

Device housing*:	64.4 x 74.5 x 25
Box:	173 x 148 x 71

*Housing measurements are presented without antenna connectors and screws; for measurements of other device elements look to the sections below.

TOP VIEW

The figure below depicts the measurements of TRB140 and its components as seen from the top:

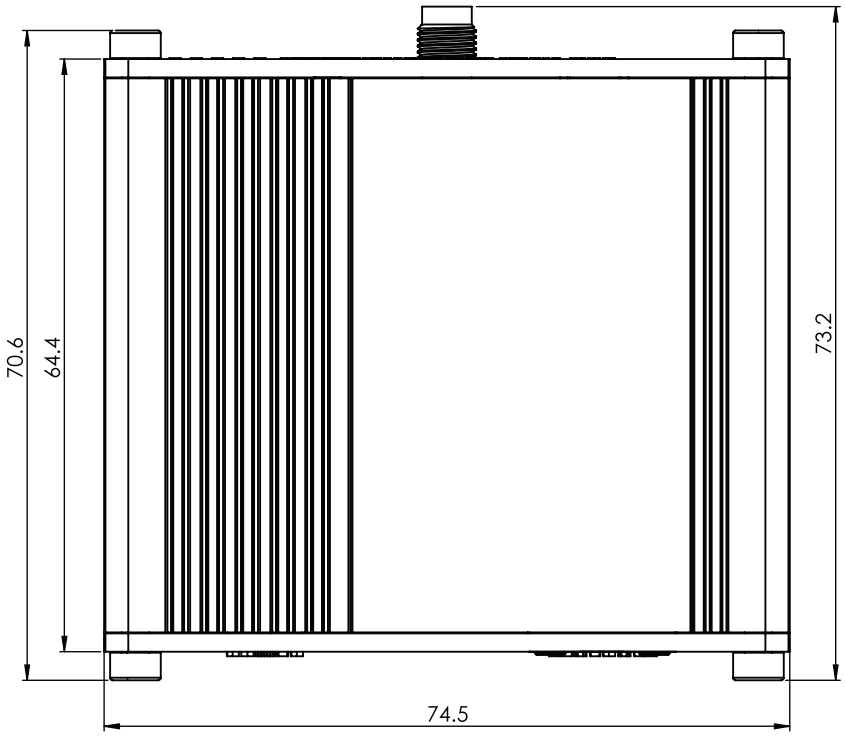

RIGHT VIEW

The figure below depicts the measurements of TRB140 and its components as seen from the right side:

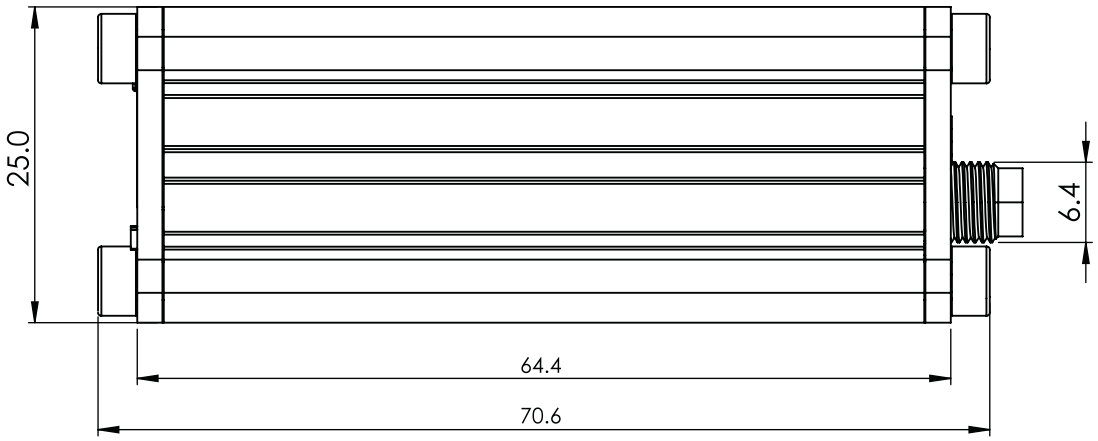

Copyright © 2020, Teltonika Networks. Specifications and information given in this document are subject to change by Teltonika Networks without prior notice.

FRONT VIEW

The figure below depicts the measurements of TRB140 and its components as seen from the front:

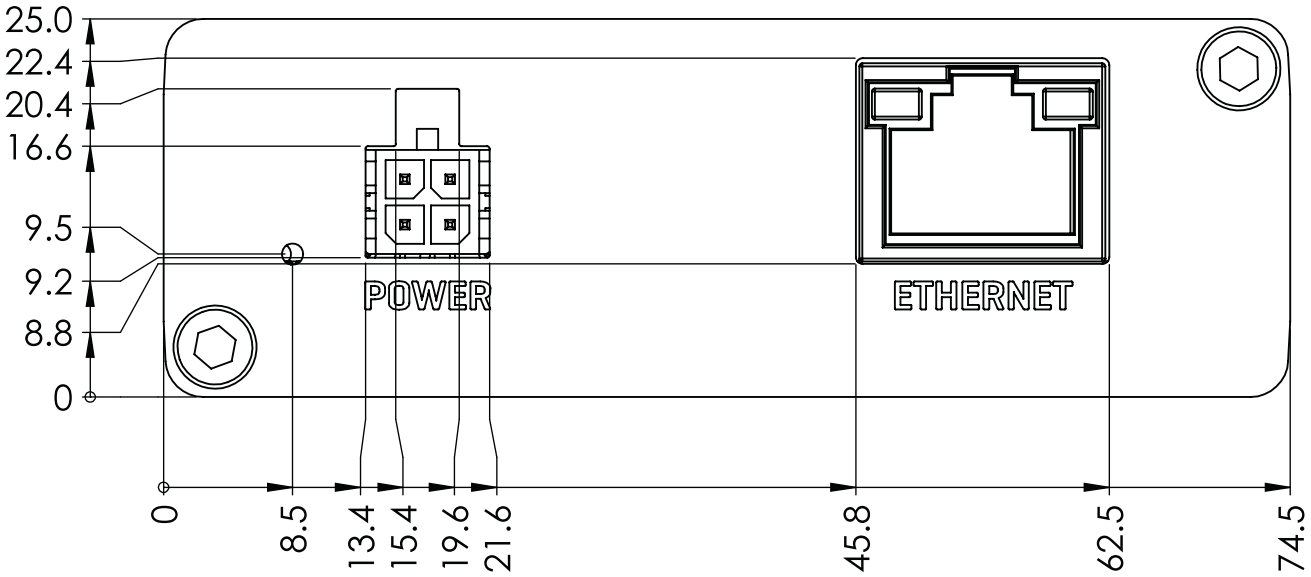

REAR VIEW

The figure below depicts the measurements of TRB140 and its components as seen from the back:

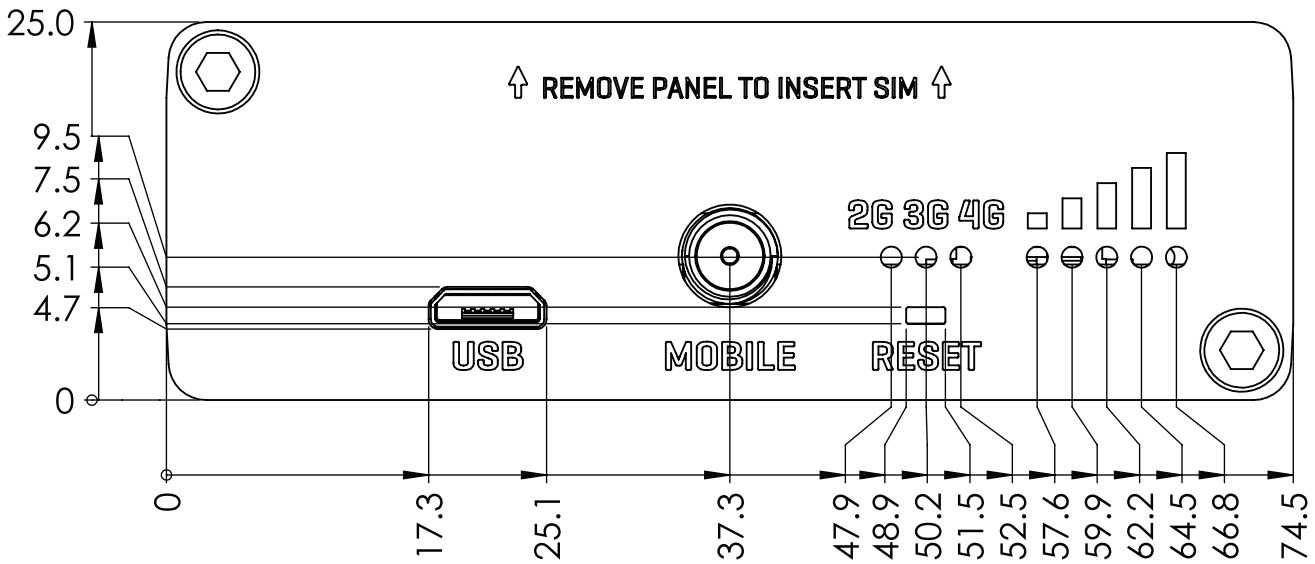

Copyright © 2020, Teltonika Networks. Specifications and information given in this document are subject to change by Teltonika Networks without prior notice.

MOUNTING SPACE REQUIREMENTS

The figure below depicts an approximation of the device's dimensions when cables and antennas are attached:

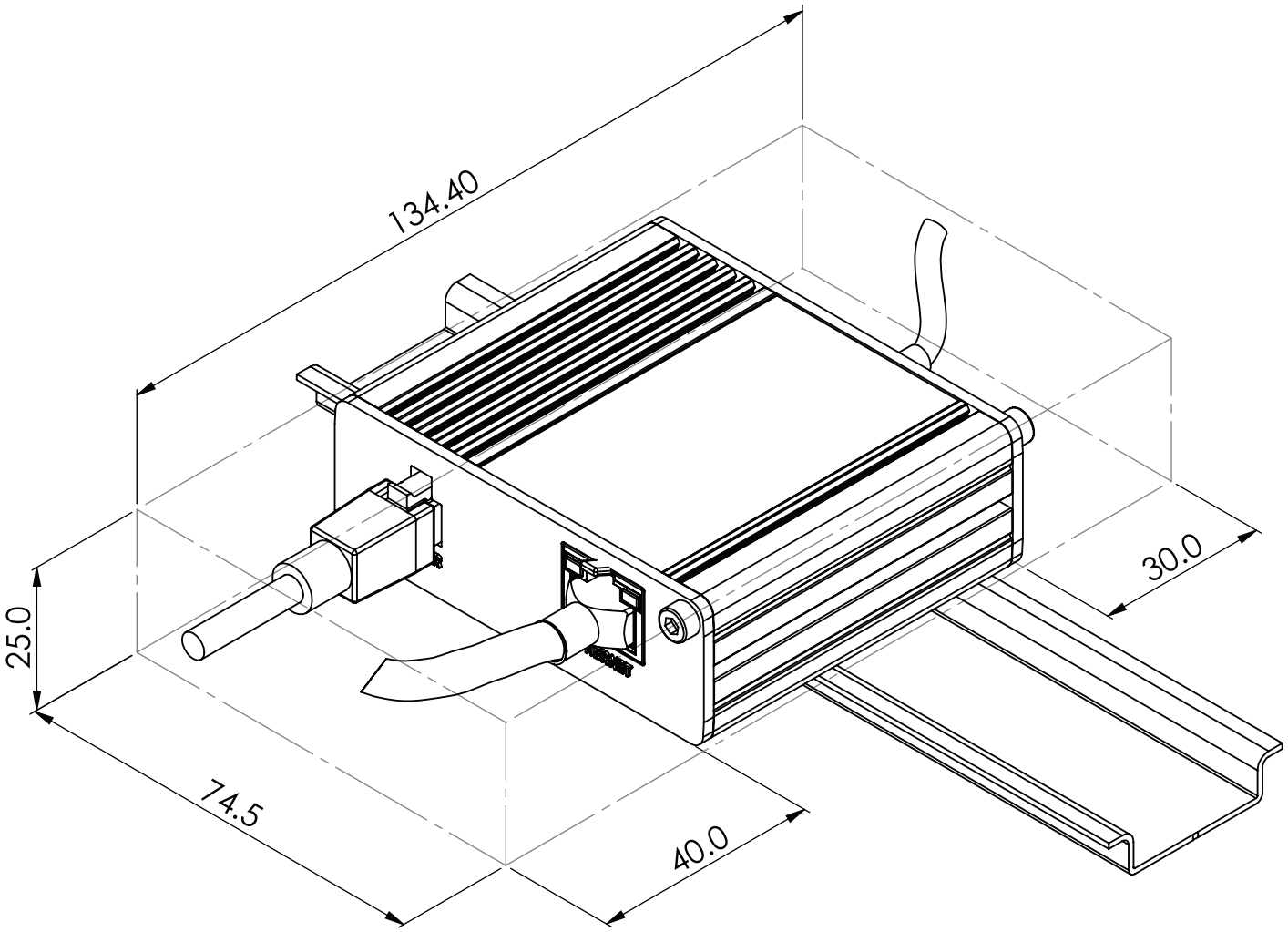

Copyright © 2020, Teltonika Networks. Specifications and information given in this document are subject to change by Teltonika Networks without prior notice.

DIN RAIL

The scheme below depicts protrusion measurements of an attached DIN Rail:

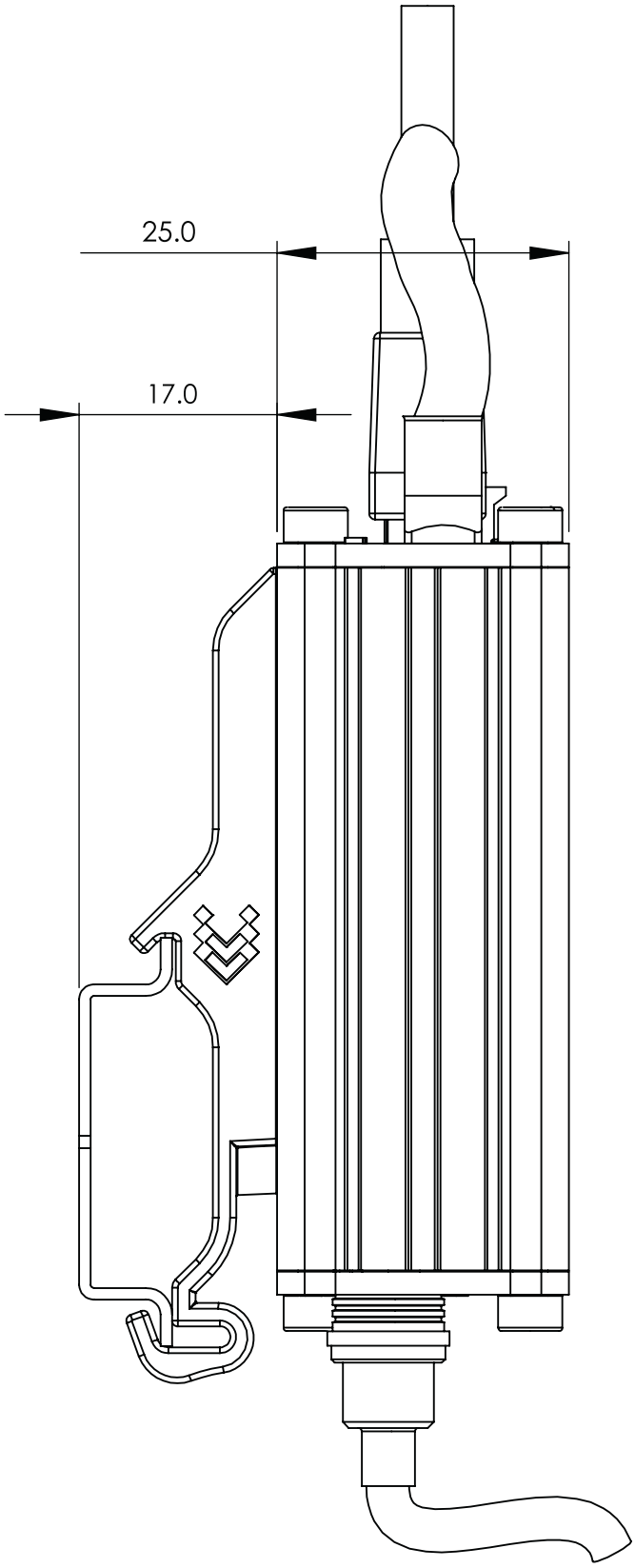

Copyright © 2020, Teltonika Networks. Specifications and information given in this document are subject to change by Teltonika Networks without prior notice.