TELTONIKA | Networks

RUT200

Copyright © 2023, TELTONIKA NETWORKS. Specifications and information given in this document are subject to change by TELTONIKA NETWORKS without prior notice.

HARDWARE

FRONT VIEW

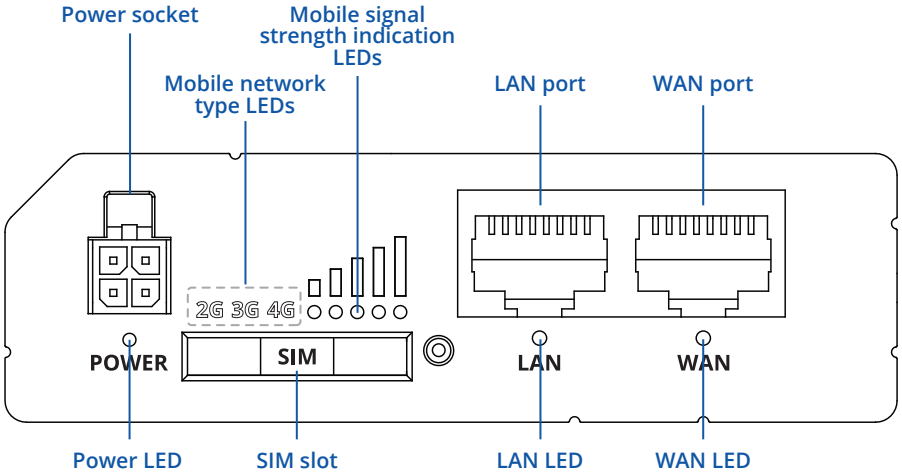

BACK VIEW

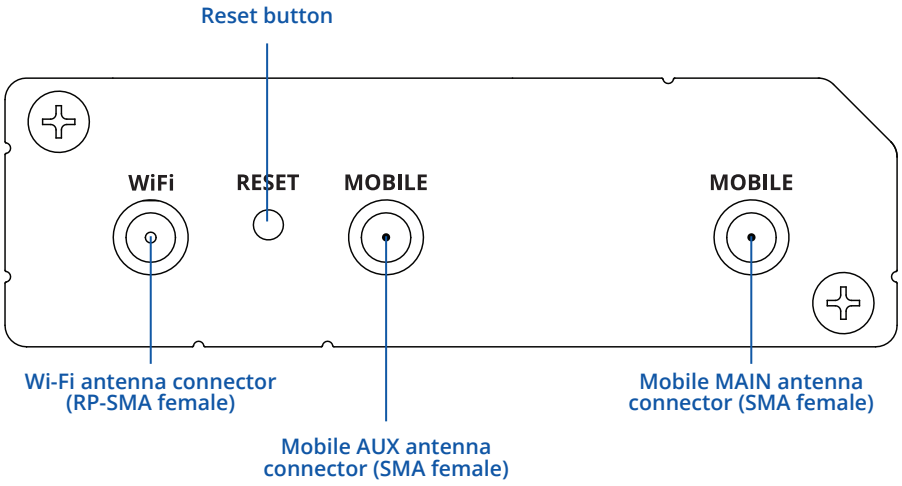

POWER SOCKET PINOUT

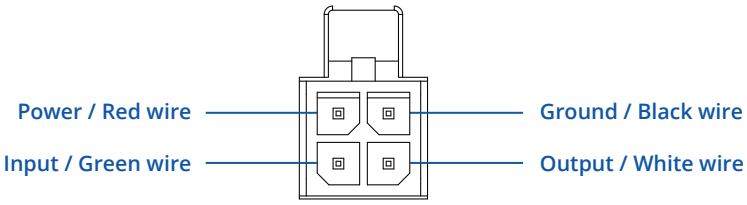

Copyright © 2023, TELTONIKA NETWORKS. Specifications and information given in this document are subject to change by TELTONIKA NETWORKS without prior notice.

FEATURES

MOBILE

Mobile module	4G (LTE) – Cat 4 up to 150 Mbps, 3G – Up to 42 Mbps, 2G – Up to 236.8 kbps
3GPP Release	Release 9
Status	Signal strength (RSSI), SINR, RSRP, RSRQ, EC/IO, RSCP, Bytes sent/received, connected band, IMSI, ICCID
SMS	SMS status, SMS configuration, send/read SMS via HTTP POST/GET, EMAIL to SMS, SMS to EMAIL, SMS to HTTP, SMS to SMS, scheduled SMS, SMS autoreply, SMPP
USSD	Supports sending and reading Unstructured Supplementary Service Data messages
Black/White list	Operator black/white list
Multiple PDN	Possibility to use different PDNs for multiple network access and services
Band management	Band lock, Used band status display
APN	Auto APN
Bridge	Direct connection (bridge) between mobile ISP and device on LAN
Passthrough	Router assigns its mobile WAN IP address to another device on LAN

WIRELESS

Wireless mode	IEEE 802.11b/g/n, Access Point (AP), Station (STA)
Wi-Fi security	WPA2-Enterprise - PEAP, WPA2-PSK, WEP, WPA-EAP, WPA-PSK; AES-CCMP, TKIP, Auto Cipher modes, client separation
SSID/ESSID	SSID stealth mode and access control based on MAC address
Wi-Fi users	Up to 50 simultaneous connections
Wireless Hotspot	Captive portal (Hotspot), internal/external Radius server, SMS authorization, internal/external landing page, walled garden, user scripts, URL parameters, user groups, individual user or group limitations, user management, 9 default customizable themes
Wireless Connectivity Features	Fast roaming (802.11r), Relayd
Wireless MAC filter	Whitelist, blacklist

ETHERNET

WAN	1 x WAN port 10/100 Mbps, compliance IEEE 802.3, IEEE 802.3u standards, supports auto MDI/MDIX
LAN	1 x LAN port, 10/100 Mbps, compliance with IEEE 802.3, IEEE 802.3u standards, supports auto MDI/MDIX

NETWORK

Routing	Static routing, Dynamic routing (BGP, OSPF v2, RIP v1/v2, EIGRP, NHRP), Policy based routing
Network protocols	TCP, UDP, IPv4, IPv6, ICMP, NTP, DNS, HTTP, HTTPS, SFTP, FTP, SMTP, SSL/TLS, ARP, VRRP, PPP, PPPoE, UPNP, SSH, DHCP, Telnet, SMPP, SMNP, MQTT, Wake On Lan (WOL)
VoIP passthrough support	H.323 and SIP-alg protocol NAT helpers, allowing proper routing of VoIP packets
Connection monitoring	Ping Reboot, Wget Reboot, Periodic Reboot, LCP and ICMP for link inspection
Firewall	Port forward, traffic rules, custom rules
DHCP	Static and dynamic IP allocation, DHCP Relay
QoS / Smart Queue Management (SQM)	Traffic priority queuing by source/destination, service, protocol or port, WMM, 802.11e
DDNS	Supported >25 service providers, others can be configured manually
Network backup	Wi-Fi WAN, Mobile, VRRP, Wired options, each of which can be used as an automatic Failover
Load balancing	Balance Internet traffic over multiple WAN connections
SSHFS	Possibility to mount remote file system via SSH protocol

SECURITY

Authentication	Pre-shared key, digital certificates, X.509 certificates, TACACS+, Radius, IP & Login attempts block
Firewall	Pre-configured firewall rules can be enabled via WebUI, unlimited firewall configuration via CLI; DMZ; NAT; NAT-T
Attack prevention	DDOS prevention (SYN flood protection, SSH attack prevention, HTTP/HTTPS attack prevention), port scan prevention (SYN-FIN, SYN-RST, X-mas, NULL flags, FIN scan attacks)
VLAN	Port and tag-based VLAN separation
Mobile quota control	Mobile data limit, customizable period, start time, warning limit, phone number
WEB filter	Blacklist for blocking out unwanted websites, Whitelist for specifying allowed sites only
Access control	Flexible access control of TCP, UDP, ICMP packets, MAC address filter

Copyright © 2023, TELTONIKA NETWORKS. Specifications and information given in this document are subject to change by TELTONIKA NETWORKS without prior notice.

VPN

OpenVPN	Multiple clients and a server can run simultaneously, 27 encryption methods
OpenVPN Encryption	DES-CBC 64, RC2-CBC 128, DES-EDE-CBC 128, DES-EDE3-CBC 192, DESX-CBC 192, BF-CBC 128, RC2-40-CBC 40, CAST5-CBC 128, RC2-64-CBC 64, AES-128-CBC 128, AES-128-CFB 128, AES-128-CFB1 128, AES-128-CFB8 128, AES-128-OFB 128, AES-128-GCM 128, AES-192-CFB 192, AES-192-CFB1 192, AES-192-CFB8 192, AES-192-OFB 192, AES-192-CBC 192, AES-192-GCM 192, AES-256-GCM 256, AES-256-CFB 256, AES-256-CFB1 256, AES-256-CFB8 256, AES-256-OFB 256, AES-256-CBC 256
IPsec	IKEv1, IKEv2, with 14 encryption methods for IPsec (3DES, DES, AES128, AES192, AES256, AES128GCM8, AES192GCM8, AES256GCM8, AES128GCM12, AES192GCM12, AES256GCM12, AES128GCM16, AES192GCM16, AES256GCM16)
GRE	GRE tunnel, GRE tunnel over IPsec support
PPTP, L2TP	Client/Server instances can run simultaneously, L2TPv3, L2TP over IPsec support
Stunnel	Proxy designed to add TLS encryption functionality to existing clients and servers without any changes in the program's code
DMVPN	Method of building scalable IPsec VPNs
SSTP	SSTP client instance support
ZeroTier	ZeroTier VPN client support
WireGuard	WireGuard VPN client and server support
Tinc	Tinc offers encryption, authentication and compression in it's tunnels. Client and server support.

MODBUS TCP SLAVE

ID range	Respond to one ID in range [1;255] or any
Allow Remote Access	Allow access through WAN
Custom registers	MODBUS TCP custom register block requests, which read/write to a file inside the router, and can be used to extend MODBUS TCP Slave functionality

MODBUS TCP MASTER

Supported functions	01, 02, 03, 04, 05, 06, 15, 16
Supported data formats	8-bit: INT, UINT; 16-bit: INT, UINT (MSB or LSB first); 32-bit: float, INT, UINT (ABCD (big-endian), DCBA (little-endian), CDAB, BADC)

DATA TO SERVER

Protocol	HTTP(S), MQTT, Azure MQTT, Kinesis

MQTT GATEWAY

MQTT Gateway	Allows sending commands and receiving data from MODBUS Master through MQTT broker

DNP3

Supported modes	TCP Master, DNP3 Outstation

MONITORING & MANAGEMENT

WEB UI	HTTP/HTTPS, status, configuration, FW update, CLI, troubleshoot, event log, system log, kernel log
FOTA	Firmware update from server, automatic notification
SSH	SSH (v1, v2)
SMS	SMS status, SMS configuration, send/read SMS via HTTP POST/GET
Call	Reboot, Status, Mobile data on/off, Output on/off, answer/hang-up with a timer, Wi-Fi on/off
TR-069	OpenACS, EasyCwmp, ACSLite, tGem, LibreACS, GenieACS, FreeACS, LibCWMP, Friendly tech, AVSystem
MQTT	MQTT Broker, MQTT publisher
SNMP	SNMP (v1, v2, v3), SNMP Trap
JSON-RPC	Management API over HTTP/HTTPS
MODBUS	MODBUS TCP status/control
RMS	Teltonika Remote Management System (RMS)

IoT PLATFORMS

Cloud of Things	Allows monitoring of: Device data, Mobile data, Network info, Availability
ThingWorx	Allows monitoring of: WAN Type, WAN IP, Mobile Operator Name, Mobile Signal Strength, Mobile Network Type
Cumulocity	Allows monitoring of: Device Model, Revision and Serial Number, WAN Type and IP, Mobile Cell ID, ICCID, IMEI, Connection Type, Operator, Signal Strength
Azure IoT Hub	Can send device IP, Number of bytes send/received, Temperature, PIN count to Azure IoT Hub server, Mobile connection state, Network link state, IMEI, ICCID, Model, Manufacturer, Serial, Revision, IMSI, SIM State, PIN state, GSM signal, WCDMA RSCP, WCDMA EC/IO, LTE RSRP, LTE SINR, LTE RSRQ, CELL ID, Operator, Operator number, Connection type

Copyright © 2023, TELTONIKA NETWORKS. Specifications and information given in this document are subject to change by TELTONIKA NETWORKS without prior notice.

SYSTEM CHARACTERISTICS

CPU	Mediatek, 580 MHz, MIPS 24KEc
RAM	128 MB, DDR2
FLASH storage	16 MB, SPI Flash

FIRMWARE / CONFIGURATION

WEB UI	Update FW from file, check FW on server, configuration profiles, configuration backup
FOTA	Update FW
RMS	Update FW/configuration for multiple devices at once
Keep settings	Update FW without losing current configuration

FIRMWARE CUSTOMIZATION

Operating system	RutOS (OpenWrt based Linux OS)
Supported languages	Busybox shell, Lua, C, C++
Development tools	SDK package with build environment provided

POWER

Connector	4-pin industrial DC power socket
Input voltage range	9 – 30 VDC, reverse polarity protection; surge protection >31 VDC 10us max
PoE (passive)	Passive PoE over spare pairs. Possibility to power up through LAN1 port, not compatible with IEEE802.3af, 802.3at and 802.3bt standards, Mode B, 9 - 30 VDC
Power consumption	< 6.5 W Max

INPUT/OUTPUT

Input	1 x Digital Input, 0 - 6 V detected as logic low, 8 - 30 V detected as logic high
Output	1 x Digital Output, Open collector output, max output 30 V, 300 mA
Events	Email, RMS, SMS
I/O juggler	Allows to set certain I/O conditions to initiate event

PHYSICAL INTERFACES (PORTS, LEDS, ANTENNAS, BUTTONS, SIM)

Ethernet	2 x RJ45 ports, 10/100 Mbps
I/O's	1 x Digital Input, 1 x Digital Output on 4-pin power connector
Status LEDs	3 x Connection type status LEDs, 5 x Connection strength LEDs, 2 x LAN status LEDs, 1 x Power LED
SIM	1 x SIM slot (Mini SIM – 2FF), 1.8 V/3 V, external SIM holder
Power	1 x 4-pin power connector
Antennas	2 x SMA for LTE, 1 x RP-SMA for Wi-Fi antenna connectors
Reset	Reboot/User default reset/Factory reset button

PHYSICAL SPECIFICATION

Casing material	Aluminium housing, plastic panels
Dimensions (W x H x D)	83 x 25 x 74 mm
Weight	125 g
Mounting options	Bottom and sideways DIN rail mounting slots

OPERATING ENVIRONMENT

Operating temperature	-40 °C to 75 °C
Operating humidity	10% to 90% non-condensing
Ingress Protection Rating	IP30

REGULATORY & TYPE APPROVALS

Regulatory	CB

SAFETY

Standards	IEC 62368-1:2018 (CB Scheme)

Copyright © 2023, TELTONIKA NETWORKS. Specifications and information given in this document are subject to change by TELTONIKA NETWORKS without prior notice.

WHAT'S IN THE BOX?

STANDARD PACKAGE CONTAINS*

- Router RUT200
- 9 W PSU
- 2x LTE antennas (swivel, SMA male)
- 1x Wi-Fi antenna (swivel, RP-SMA male)
- QSG (Quick Start Guide)
- Packaging box

ROUTER RUT260	9 W PSU	2 X LTE ANTENNAS (SWIVEL, SMA MALE)
1 X Wi-Fi ANTENNAS (SWIVEL, RP-SMA MALE)	QSG	

* For all standard order codes standard package contents are the same, execpt for PSU.

Copyright © 2023, TELTONIKA NETWORKS. Specifications and information given in this document are subject to change by TELTONIKA NETWORKS without prior notice.

STANDARD ORDER CODES

PRODUCT CODE	HS CODE	HTS CODE	PACKAGE CONTAINS
RUT200 010000	851762	8517.62.00	Standard package with EU PSU
RUT200 024000	851762	8517.62.00	Standard package with AU PSU
RUT200 036000	851762	8517.62.00	Standard package with power cable with 4-way screw terminal

For more information on all available packaging options – please contact us directly.

AVAILABLE VERSIONS

PRODUCT CODE	REGION (OPERATOR)	FREQUENCY
RUT200 *1****	Europe[1], Australia, Asia-Pacific	• **4G (LTE-FDD):** B1, B3, B5, B7, B8, B20, B28 • **4G (LTE-TDD):** B38, B40, B41 • **3G:** B1, B5, B8 • **2G:** B3, B8
RUT200 *2****	Latin America	• **4G (LTE-FDD):** B1, B2, B3, B4, B5, B7, B8, B28, B66 • **4G (LTE-TDD):** B40 • **3G:** B1, B2, B4, B5, B8 • **2G:** B2, B3, B5, B8
RUT200 *3****	China, India	• **4G (LTE-FDD):** B1, B3, B5, B8 • **4G (LTE-TDD):** B34, B38, B39, B40, B41 • **3G:** B1, B5, B8 • **2G:** B3, B8

The price and lead-times for region (operator) specific versions may vary. For more information please contact us.
1 - Regional availability - excluding Russia & Belarus.

Copyright © 2023, TELTONIKA NETWORKS. Specifications and information given in this document are subject to change by TELTONIKA NETWORKS without prior notice.

RUT200 SPATIAL MEASUREMENTS & WEIGHT

MAIN MEASUREMENTS

W x H x D dimensions for RUT200:

Device housing*:	83 x 25 x 74 mm
Box:	173 x 71 x 148 mm

*Housing measurements are presented without antenna connectors and screws; for measurements of other device elements look to the sections below.

TOP VIEW

The figure below depicts the measurements of RUT200 and its components as seen from the top:

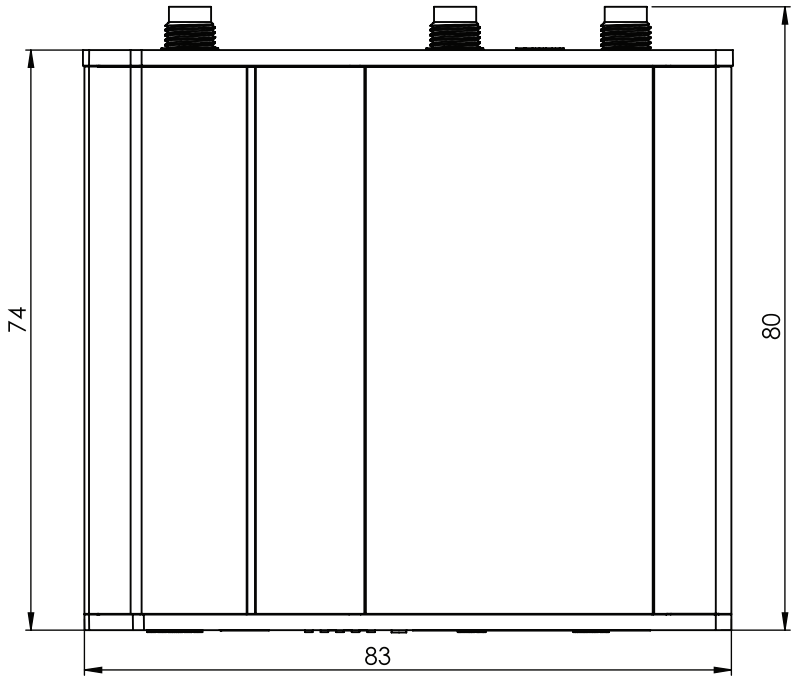

RIGHT VIEW

The figure below depicts the measurements of RUT200 and its components as seen from the right side:

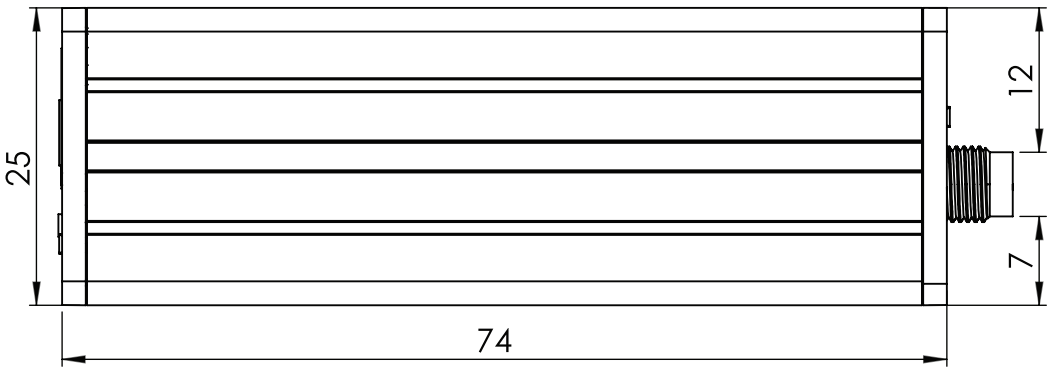

Copyright © 2023, TELTONIKA NETWORKS. Specifications and information given in this document are subject to change by TELTONIKA NETWORKS without prior notice.

FRONT VIEW

The figure below depicts the measurements of RUT200 and its components as seen from the front panel side:

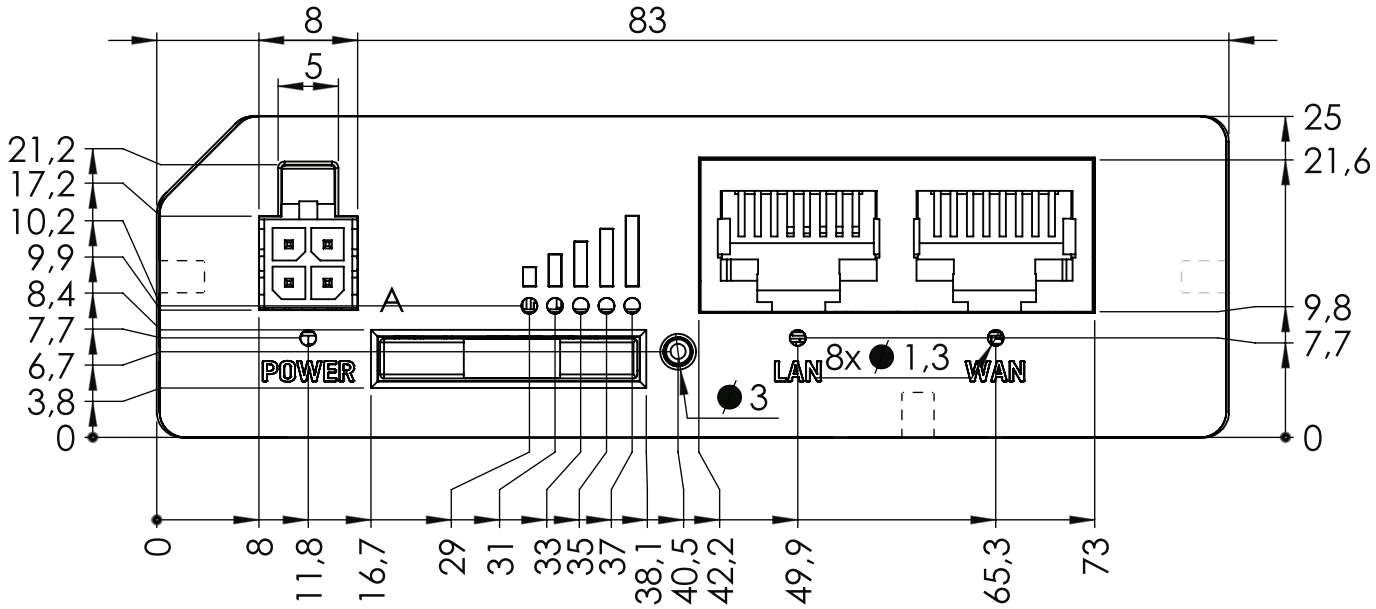

REAR VIEW

The figure below depicts the measurements of RUT200 and its components as seen from the back panel side:

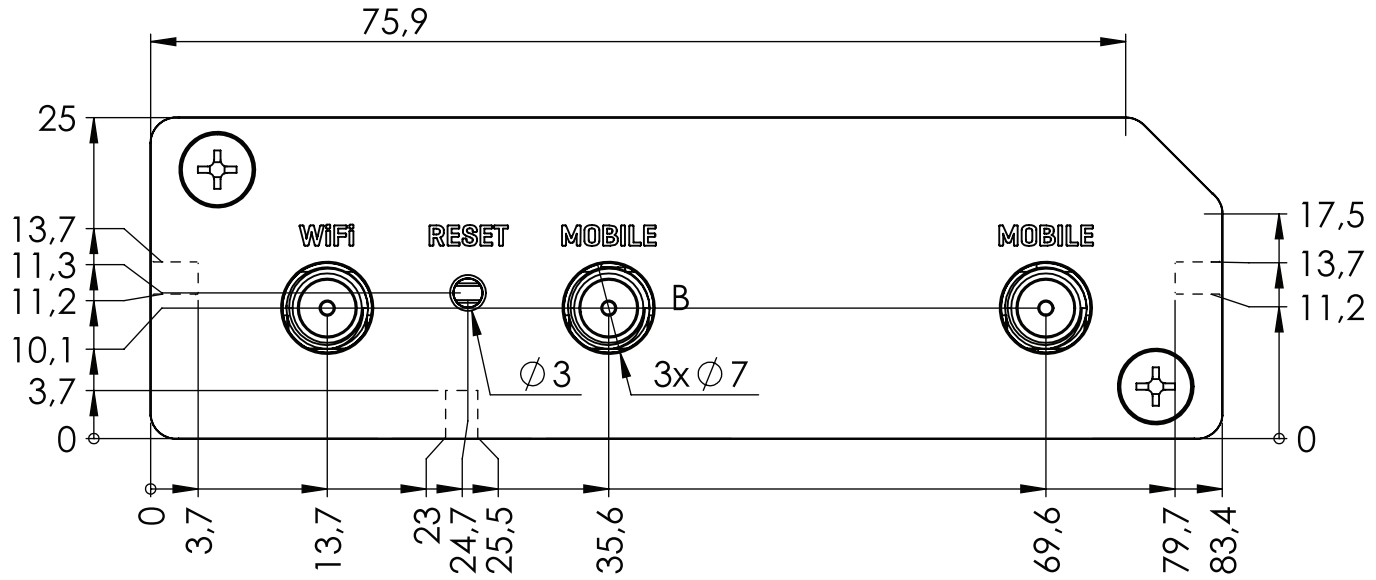

Copyright © 2023, TELTONIKA NETWORKS. Specifications and information given in this document are subject to change by TELTONIKA NETWORKS without prior notice.

MOUNTING SPACE REQUIREMENTS

The figure below depicts an approximation of the device's dimensions when cables and antennas are attached:

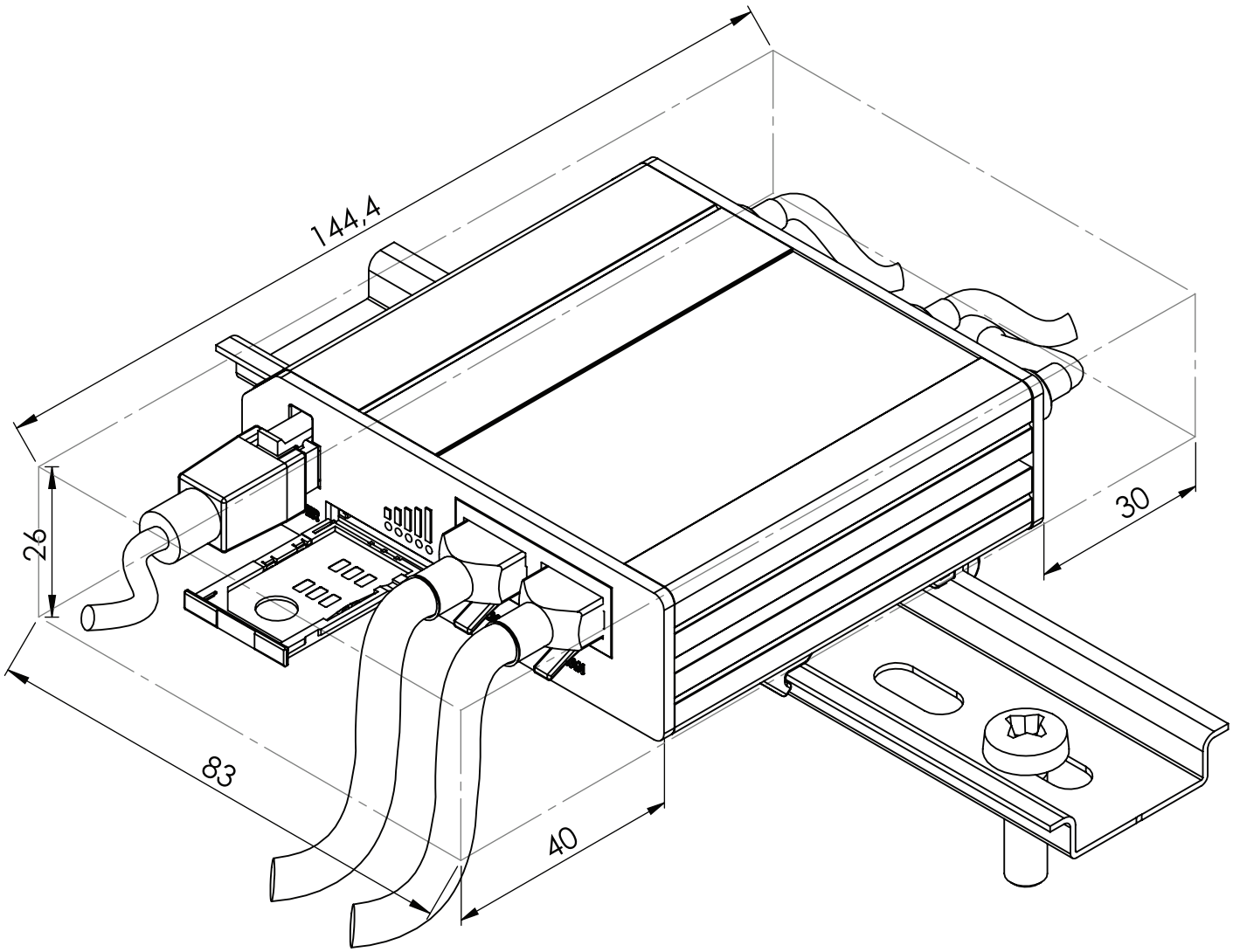

Copyright © 2023, TELTONIKA NETWORKS. Specifications and information given in this document are subject to change by TELTONIKA NETWORKS without prior notice.

DIN RAIL

The scheme below depicts protrusion measurements of an attached DIN Rail:

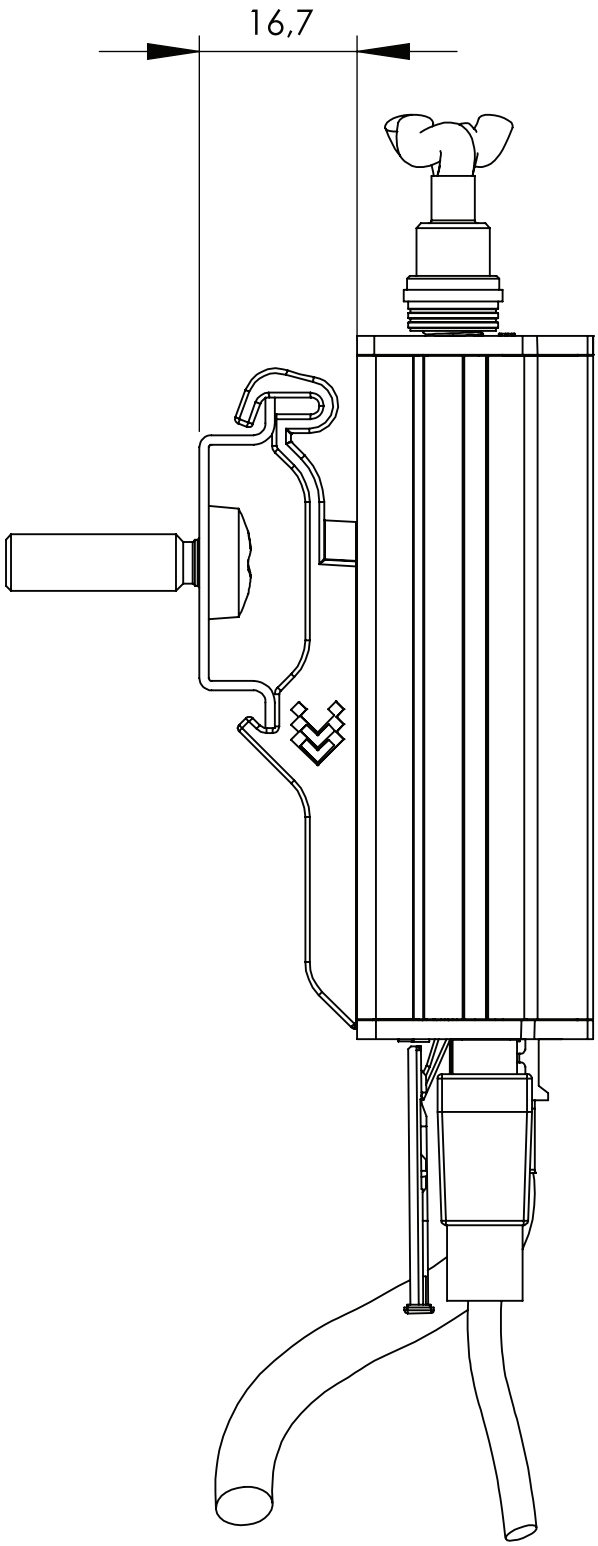

Copyright © 2023, TELTONIKA NETWORKS. Specifications and information given in this document are subject to change by TELTONIKA NETWORKS without prior notice.